IJSEAT International Journal of Science Engineering and Advance Technology

Evalauation Of Heat Transfer Characteristics Of Titanium Nitride And Titanium Carbide Nano Fluids In Shell & Tube Heat Exchanger

[1] Palla.Madhavi [2] J.Ramesh Naidu [3]Y.Dhana Sekhar
[1] M. Tech. Student, [2]Assistant.Professor
Dept Of ME, Godavari Institute of Engineering And Technology, Rajahmundry
[3]Reserch Scholar

Abstract : The Shell and tube heat exchangers signify the most widely used vehicle for the transfer of heat in industrial process and applications. Shell and tube heat exchangers have the capability to transfer huge amounts of heat in relatively less cost, serviceable designs. They can present huge amounts of effective tube surface while minimizing the requirements of floor space, liquid volume and weight. A decade ago, with the rapid development of current nanotechnology, particles of nanometre-size (normally less than 100 nm) are used as an alternative of micrometre-size for dispersing in base liquids, and they are called as nanofluids. In this analytical investigations are done on the shell and tube heat exchanger, using forced convective heat transfer to determine flow characteristics of nanofluids by varying volume fractions and mixed with water, the nanofluids are Titanium Carbide and Titanium Nitride nanofluids and different volume concentrations (0.02,0.04,0.07and 0.15)% flowing under turbulent flow conditions.Thermal and CFD analysis is done on the heat exchanger by applying the properties of the nanofluid with different volume fractions calculated using theoretical calculations. 3D model of the heat exchanger is made in Pro/Engineer and analysis is completed in Ansys. The materials considered for shell and tube heat exchanger are Aluminum and Copper.

1.INTRODUCTION

Heat exchangers are devices in which heat is transfer from one fluid to another. The most commonly used type of heat exchanger is a shell-and-tube heat exchanger. Shell-and-tube heat exchangers are use extensively in engineering applications like power generations, refrigeration and air-conditioning, petrochemical industries etc. These heat exchangers be able to designed for almost any capacity. The main function in the heat exchanger design is given task for heat transfer measurement to govern the overall cost of the heat exchanger. The heat exchanger was introduced in the early 1900s to execute the needs in power plants for large heat exchanger surfaces as condensers and feed water heaters capable of operating under relatively high pressures. Both of these original applications of shell-and-tube heat exchangers continued to be used; but the design have become highly sophisticated and specialized, subject to various specific codes and practices. First step in the effective consideration of allowable pressure drops is to establish a quantitative relationship between velocity, friction factors, pressure drop of the stream and number of transfer units. The solution of this equation provides the core of such an algorithm.

2.SHELL AND TUBE HEAT EXCHANGER

By far the most common type of heat exchangers to be encountered in the thermal applications is shell-and-tube heat exchangers. These are available in a variety of configurations with numerous construction features and with differing materials for specific applications. This chapter explains the basics of exchanger thermal design, covering such topics as: shell-and-tube heat exchanger components; arrangement of shell-and-tube heat exchangers according to construction.

2.1 CONSTRUCTIONAL DETAILS OF SHELL AND TUBE HEAT EXCHANGER

It is important for the designer to have a excellent knowledge of the mechanical features of shell-and-tube heat exchangers and how they manipulate thermal design. The main components of shell-and-tube heat exchangers are:

- Shell

- Shell cover
- Tubes
- Channel
- Channel cover
- Tube sheet
- Baffles
- Nozzles

Other components include tie-rods and spacers, pass partition plates, impingement Plate, longitudinal baffles, sealing strips, supports, and foundation. The Tubular Exchanger Manufacturer is Association, TEMA, has introduced a standardized nomenclature for shell-and-tube heat exchangers. A three-letter code has been used to designate the overall configurations. The three important elements of any shell-and-tube heat exchangers are front head, the shell and rear head design respectively. The Standards of Tubular Exchanger Manufacturers Association (TEMA) describes the various components of various class of shell-and-tube heat exchanger in detail.

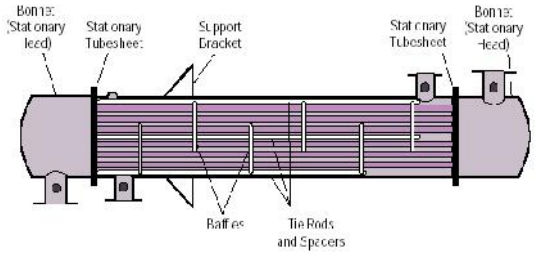

3. INTRODUCTION TO PRO/ENGINEER

Pro/ENGINEER Wild fire is the standard in 3D product design, featuring industry-leading productivity tools that promote the best practices in design while ensuring compliance with your industry and company principles. Integrated Pro/ENGINEER CAD/CAM/CAE solutions allow you to design faster than ever, while maximizing innovation and quality to ultimately create exceptional products.

Customer necessities may change and time pressures could continue to mount, but your product design needs remain the same - regardless of your project's scope, you require the powerful, easy-to-use, affordable solution that Pro/ENGINEER provides.

3.1 PRO/ENGINEER WILDFIRE BENEFITS

•Unsurpassed geometry creation capabilities allow superiorproduct differentiation and manufacturability

•Fully integrated applications allow you to develop everything from concept to manufacturing within one application

•Automatic propagation of design changes to all downstream deliverables allows you to design with confidence

•Complete virtual simulation capabilities enable you to improve product performance and exceed product quality goals

•computerized generation of associative tooling design, assembly instructions, and machine code allow for maximum production efficiency

3.2 DIFFERENT MODULES IN PRO/ENGINEER

- PART DESIGN
- ASSEMBLY
- DRAWING
- SHEETMETAL

3.3 3D MODEL OF SHELL AND TUBE HEAT EXCHANGER

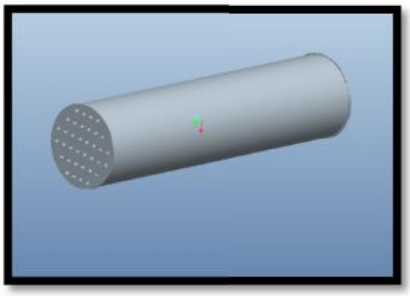

3.1 3D MODEL

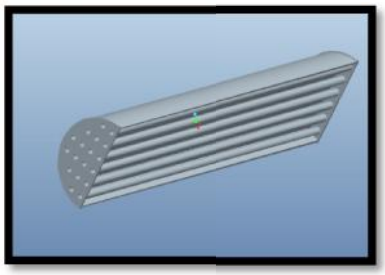

3.2 CUT SECTION

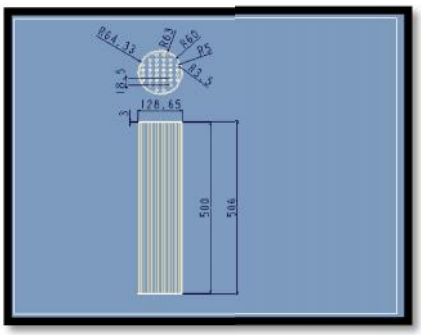

3.3 2D DRAWING

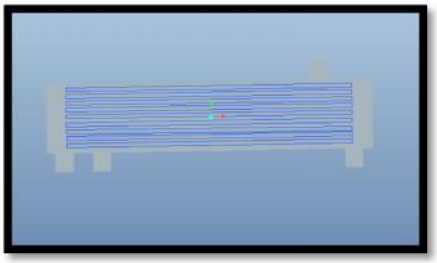

3.4 2D MODEL

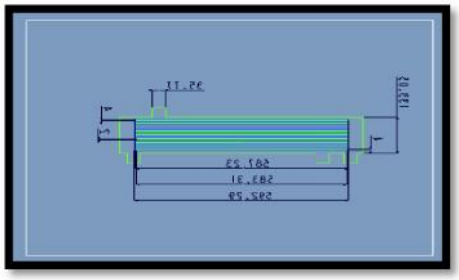

3.5 2D DRAWING

4. INTRODUCTION TO ANSYS

ANSYS is general-purpose finite element analysis (FEA) software package.

ANSYS is the standard FEA teaching tool within the Mechanical Engineering Department at many colleges. ANSYS is also used in Civil and Electrical Engineering, as well as the Physics and Chemistry departments.

ANSYS provides a cost-effective way to explore the performance of products or processes in a virtual environment. This type of product development is termed virtual prototyping. With virtual prototyping techniques, user can iterate diverse scenarios to optimize the product long before the manufacturing is started. This enables a reduction in the level of risk, and in the cost of ineffective designs. The multifaceted nature of ANSYS also provides a means to ensure that users are able to see the effect of a design on the whole behavior of the product, be it electromagnetic, thermal, mechanical etc.

4.1 INTRODUCTION TO CFD

Computational fluid dynamics, generally abbreviate as CFD, is a branch of fluid mechanics that uses numerical methods and algorithms to solve and analyze problems that involve fluid flows. Computers are used to perform the calculations required to simulate the interaction of liquids and gases with surfaces defined by boundary conditions. With high-speed supercomputers, enhanced solutions can be achieved. continuing research yield software that improve the accuracy and speed of complex simulation scenarios such as transonic or turbulent flows. primary experimental validation of such software is performed using a wind tunnel with the final validation coming in full-scale testing, e.g. flight tests.

4.2 CFD ANALYSIS OF SHELL AND TUBE HEAT EXCHANGER

TITANIUM CARBIDE NANO FLUID
VOLUME FRACTION 0.02, 0.04, 0.07&0.15

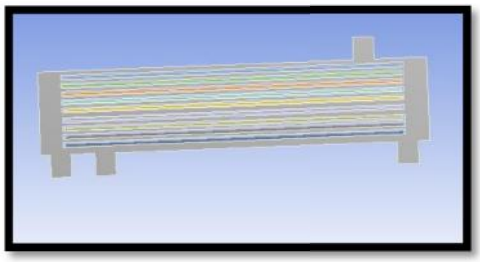

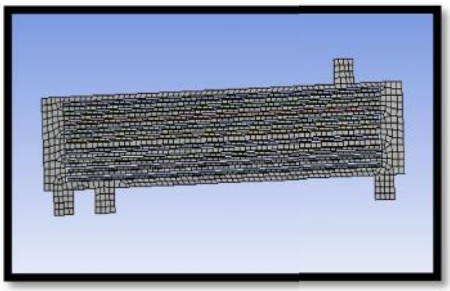

4.1 Meshed model

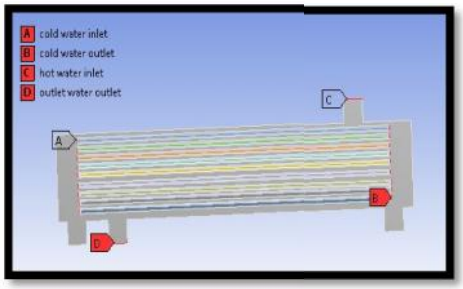

4.3 VOLUME FRACTION AT 0.02

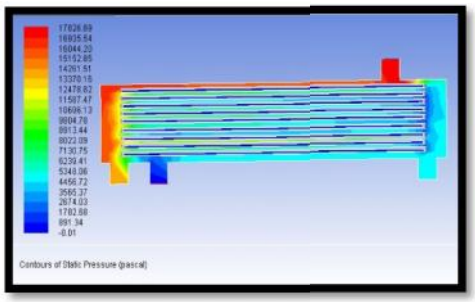

4.2 PRESSURE CONTOURS

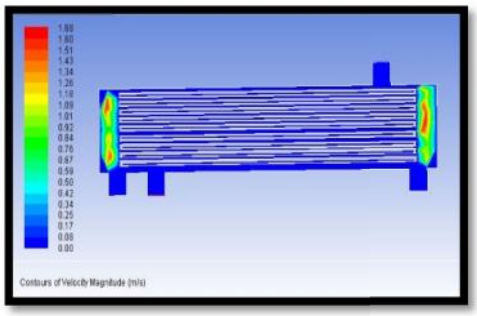

4.3 VELOCITY MAGNITUDE

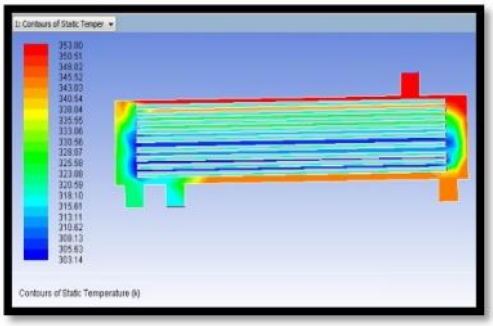

4.4 TEMPERATURE

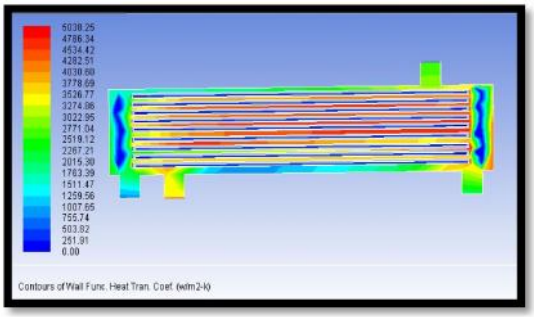

4.5 HEAT TRANSFER COEFFICIENT

4.3.1. Titanium Nitride Nano Fluid

Volume Fraction At 0.02

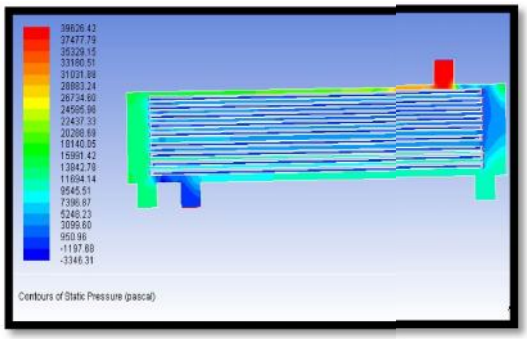

4.6 PRESSURE CONTOURS

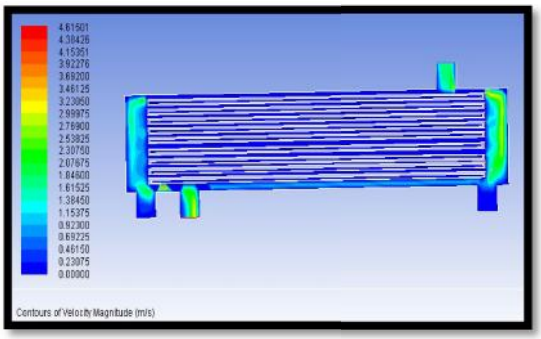

4.7 VELOCITY MAGNITUDE

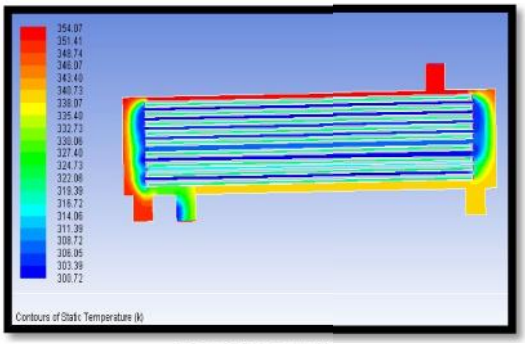

4.8 TEMPERATURE

4.3.2. COPPER

VOLUME FRACTIONS AT 0.02

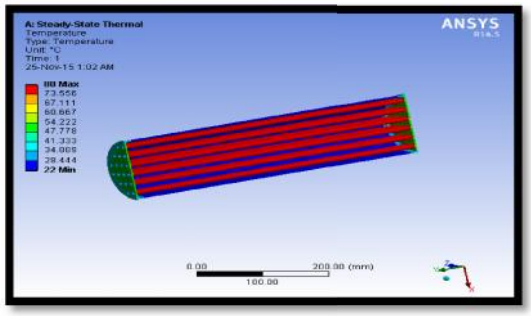

4.9. TEMPERATURE

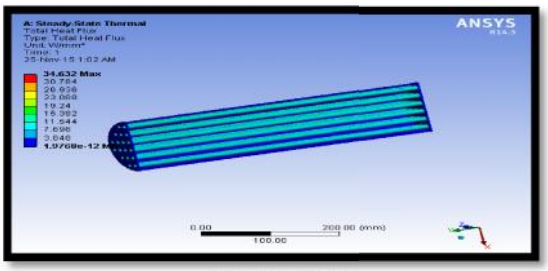

4.10 .HEAT FLUX

5. CFD RESULT TABLE

TITANIUM CARBIDE NANO FLUID

Volume fractions	Pressure (Pa)	Velocity (m/s)	Temperature (°C)	Film coefficient (W/m^2-k)	Mass flow rate (Kg/s)	Heat transfer rate (W)
0.02	17826.89	1.68	353	5038.248	0.083484	28406.375
0.04	19119.98	1.687972	353	5536.36	0.08712006	30749.25
0.07	21059.344	1.68060	353	6255.22	0.092479	33958.688
0.15	26230.03	1.68236	353	8601.79	0.10616302	45219.5

TITANIUM NITRIDE NANO FLUID

Volume fractions	Pressure (Pa)	Velocity (m/s)	Temperature (°C)	Film coefficient (W/m^2-k)	Mass flow rate (Kg/s)	Heat transfer rate (W)
0.02	39626.42	4.61501	354.07	488.30	4.551857	720781
0.04	42738.52	4.61382	354.07	523.99	4.8497	688481.63
0.07	48480.55	4.61337	354.07	581.01	5.5064774	699647
0.15	63791.23	4.61403	354.07	757.84	7.5238571	775736

GRAPHS

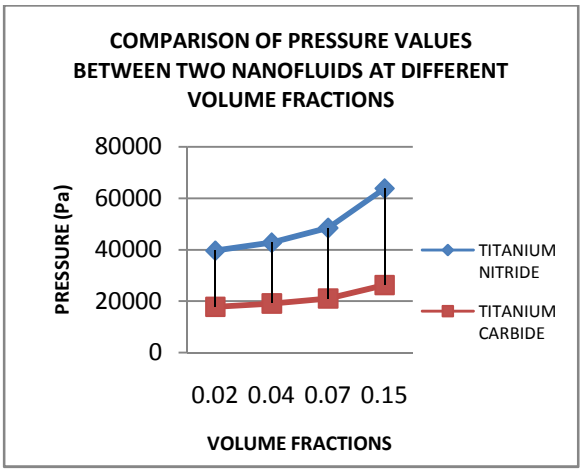

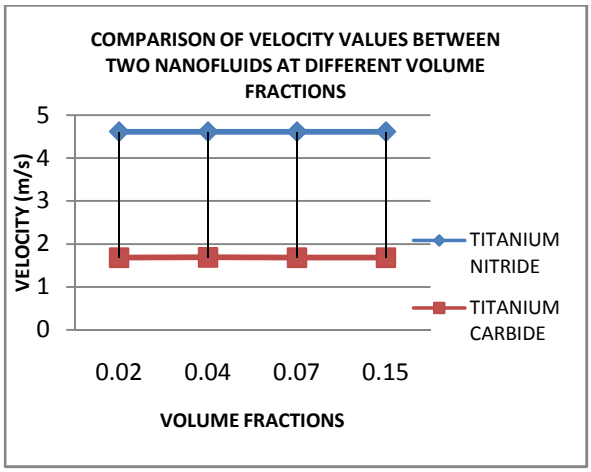

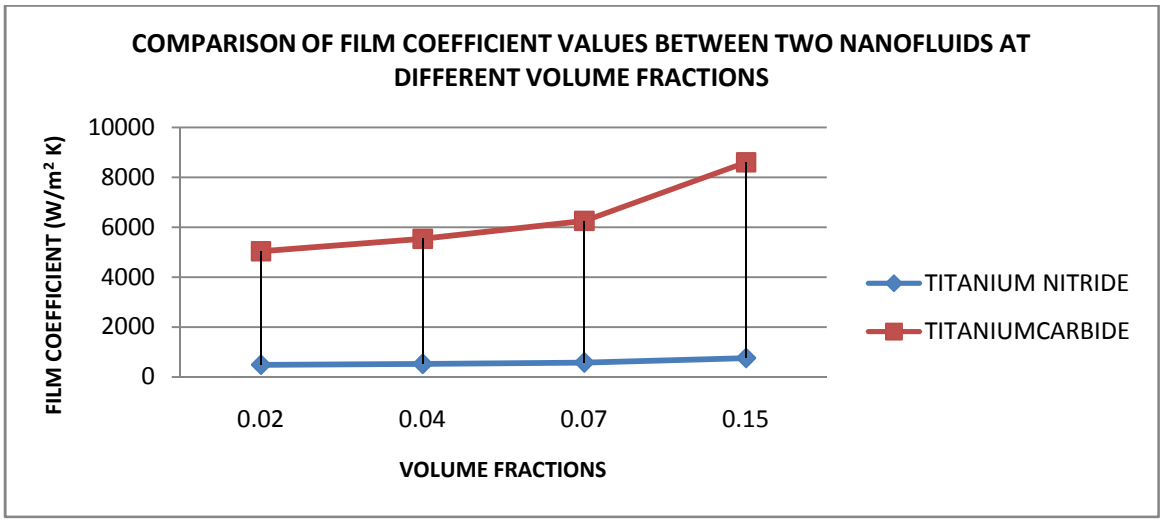
COMPARISON OF FILM COEFFICIENT VALUES BETWEEN TWO NANOFLUIDS AT DIFFERENT VOLUME FRACTIONS
FILM COEFFICIENT (W/m² K)
10000
8000
6000
4000
2000
0
0.02
0.04
0.07
0.15
VOLUME FRACTIONS
TITANIUM NITRIDE
TITANIUMCARBIDE

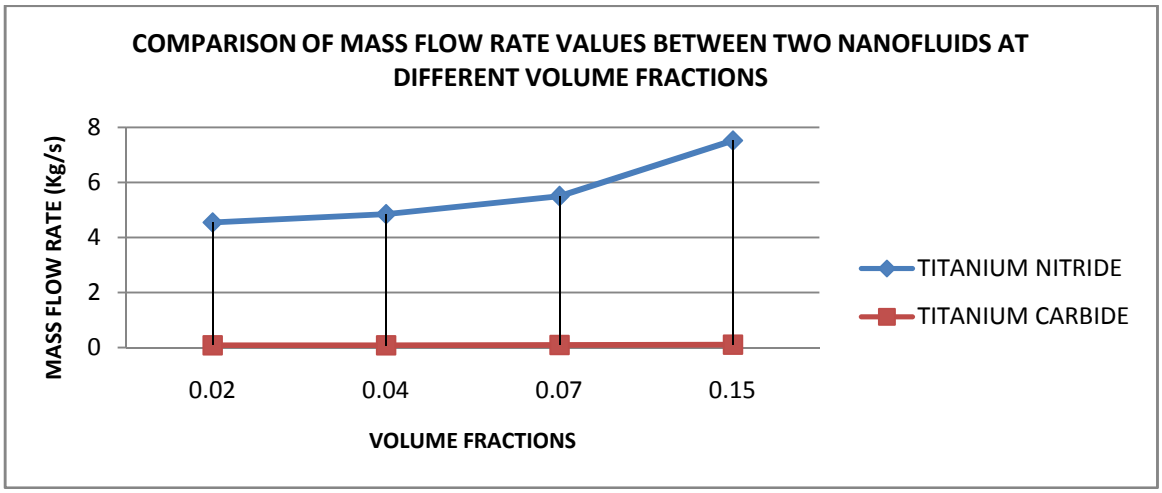
COMPARISON OF MASS FLOW RATE VALUES BETWEEN TWO NANOFLUIDS AT DIFFERENT VOLUME FRACTIONS
MASS FLOW RATE (Kg/s)
8
6
4
2
0
0.02
0.04
0.07
0.15
VOLUME FRACTIONS
TITANIUM NITRIDE
TITANIUM CARBIDE

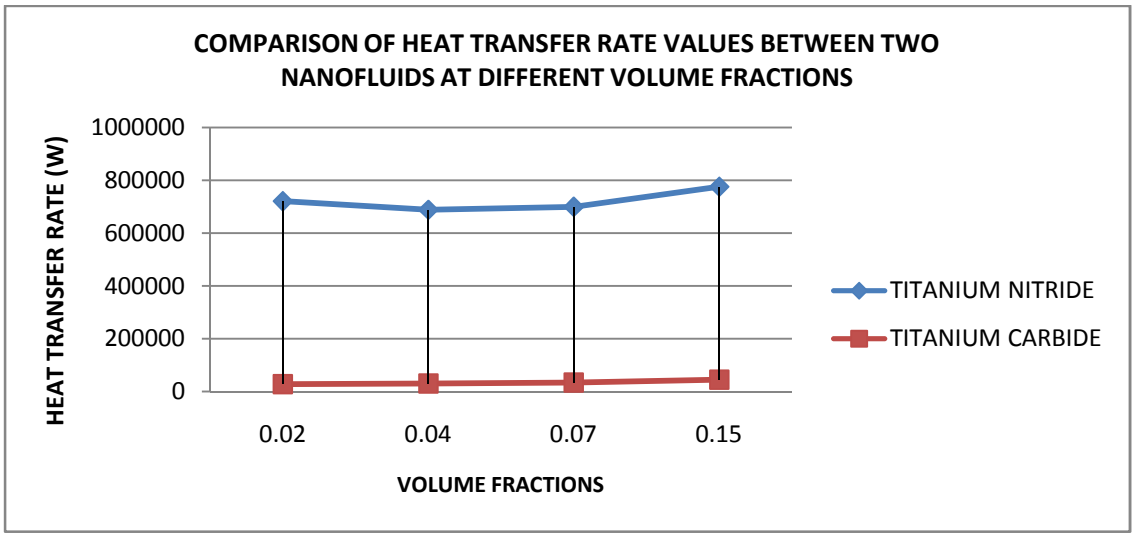
COMPARISON OF HEAT TRANSFER RATE VALUES BETWEEN TWO NANOFLUIDS AT DIFFERENT VOLUME FRACTIONS
HEAT TRANSFER RATE (W)
1000000
800000
600000
400000
200000
0
0.02
0.04
0.07
0.15
VOLUME FRACTIONS
TITANIUM NITRIDE
TITANIUM CARBIDE

5.1 THERMAL ANALYSIS RESULTS

TITANIUM CARBIDE NANO FLUID

material	Volume fractions	Temperature(° C)	Heat flux(W/mm^2)
aluminium	0.02	80	4.1142
	0.04	80	4.1606
	0.07	80	4.2223
	0.15	80	4.3937
copper	0.02	80	34.632
	0.04	80	34.972
	0.07	80	35.423
	0.15	80	36.654

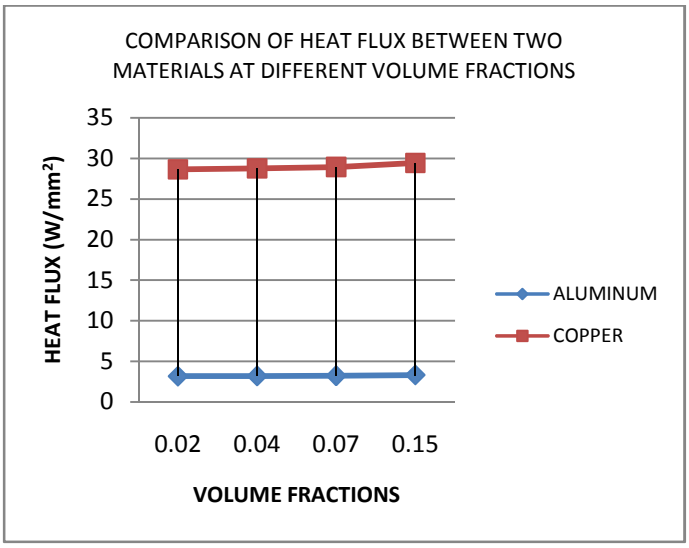

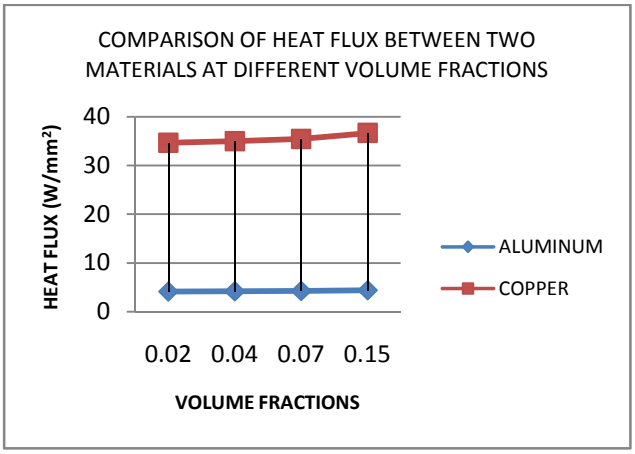

TITANIUM NITRIDE NANO FLUID

material	Volume fractions	Temperature(°C)	Heat flux(W/mm^2)
aluminium	0.02	80	3.1693
	0.04	80	3.1927
	0.07	80	3.2276
	0.15	80	3.3209
copper	0.02	80	28.63
	0.04	80	28.748
	0.07	80	28.926
	0.15	80	29.42

ALUMINUM

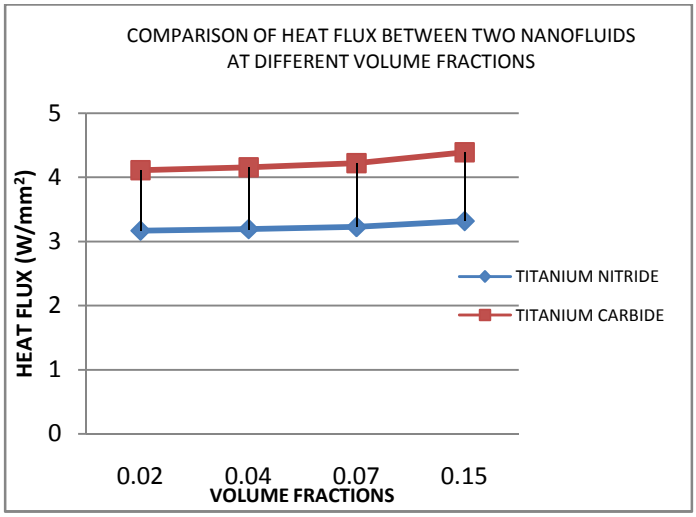

CONCLUSION

CFD and Thermal analysis are performed on the shell and tube heat exchanger using the mixture of water and different volume fractions (0.02, 0.04, 0.07, and 0.15 %) of nano fluids Titanium Carbide and Titanium nitride whose properties are theoretically calculated.

By observing the CFD analysis results, the subsequent conclusions can be made:

The pressure, heat transfer coefficient, mass flow rate and heat transfer rate are increasing by increasing the volume fractions of the nanofluids in water.

By using Titanium Nitride nanofluid, the pressure is increasing by 55%, the velocity is increasing by about 63%, the heat transfer coefficient

is decreasing by about 90%, the mass flow rate is increasing by about 98% and the heat transfer rate is increasing by about 96% when compared with that of Titanium Carbide nanofluid.

By observing the thermal analysis results, the subsequent conclusions can be made:

By varying volume fractions, the heat flux (i.e) heat transfer rate is increasing by 1.11% for volume fraction 0.04 when compared with that of volume fraction 0.02, increasing by 2.6% for volume fraction 0.07 when compared with that of volume fraction 0.02, increasing by 6.36% for volume fraction 0.04 when compared with that of volume fraction 0.02 for Aluminum and Titanium Carbide nanofluid.

The heat flux is increasing by 0.73% for volume fraction 0.04 when compared with that of volume fraction 0.02, increasing by 1.8% for volume fraction 0.07 when compared with that of volume fraction 0.02, increasing by 4.56% for volume fraction 0.04 when compared with that of volume fraction 0.02 for Aluminum and Titanium Nitride nanofluid.

The heat flux is increasing by 0.97% for volume fraction 0.04 when compared with that of volume fraction 0.02, increasing by 2.23% for volume fraction 0.07 when compared with that of volume fraction 0.02, increasing by 5.51% for volume fraction 0.04 when compared with that of volume fraction 0.02 for Copper and Titanium Carbide nanofluid.

The heat flux is increasing by 0.41% for volume fraction 0.04 when compared with that of volume fraction 0.02, increasing by 1.023% for volume fraction 0.07 when compared with that of volume fraction 0.02, increasing by 2.68% for volume fraction 0.04 when compared with that of volume fraction 0.02 for Copper and Titanium Nitride nanofluid.

By comparing the results between the nanofluids Titanium Carbide has more heat transfer rate than Titanium Niride.

REFERENCES

1. Shell-and-Tube Heat Exchanger R. Shankar Subramanian, Mcadams, W.H., *Heat Transmission*, (McGraw-Hill, New York), pp 430-441, 1954
2. Jenssen, S.K., Heat exchanger optimization, *Chemical Eng. Progress*, 65(7), pp 59, 1969
3. Sidney, K., and Jones, P.R., Programs for the price optimum design of heat exchangers, *British Chemical Engineering*, April,pp 195-198, 1970
4. Steinmeyer, D.E., Energy price impacts design, *Hydrocarbon Process*, November, pp 205, 1976.
5. Steinmeyer, D.E., Take your pick – capital or energy, *CHEMTECH*, March, 1982
6. Peter, M.S. and Timmerhaus, K.D., Plant design and economics for chemical engineers, pp 678-696 3rd Ed., McGraw-Hill, New York, 1981
7. Kovarik, M., Optimal heat exchanger, *Journal of Heat Transfer*, Vol. 111, May, pp 287-293, 1989
8. Polley, G.T., Panjeh Shahi, M.H. and Nunez, M.P., Rapid design algorithms for shell-and-tube and compact heat exchangers, *Trans IChemE*, Vol. 69(A), November,pp 435-444, 1991
9. Jegede, F.O. and Polley, G.T., Optimum heat exchanger design, *Trans IChemE*, Vol. 70(A), March, pp 133-141, 1992
10. Saffar-Avval, M. and Damangir, E., A general correlation for determining optimum baffle spacing for all types of shell-and-tube heat exchangers, *International Journal of Heat and Mass Transfer*, Vol. 38 (13), pp 2501-2506, 1995